INVERSO NV - (PT) Aplicação em reboco | (FR) Application sur cloison maçonnée | (EN) Masonry application | (ES) Aplición en paredes de enlucido (RU) Пенал - под гипсокартон

openspace
sliding doors by GOSIMAT

A

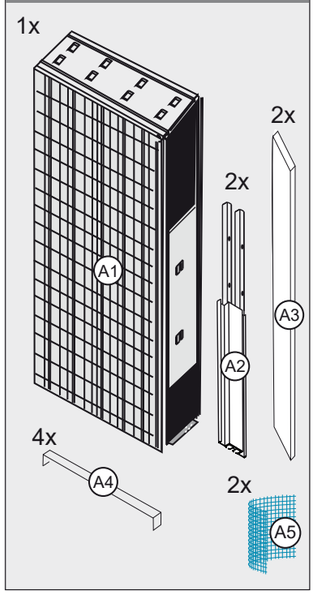

B - 2x SACO INF

1x B1	Ref.7001	
4x B2	4x40	4X40mm
2X B3	M6x30	

C - 2x SACO SUP 0006

2x C1	Ref. 3003	
4x C2	Ref.5001	
18x C3	4x40	4X40mm
1x C4	Ref: 4006	
2x C5	Ref: 14002	

1

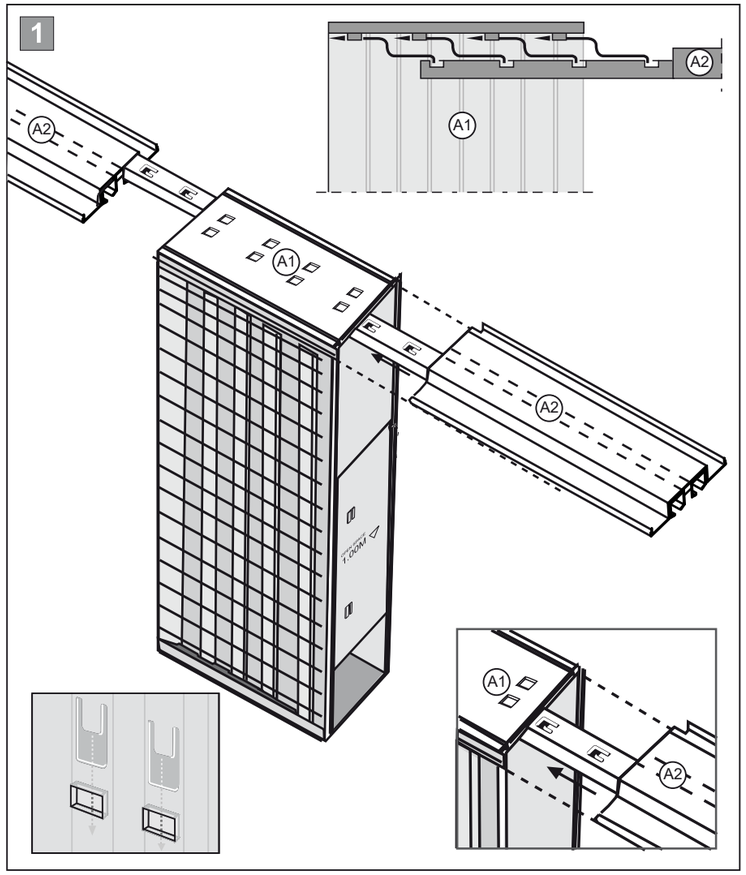

2

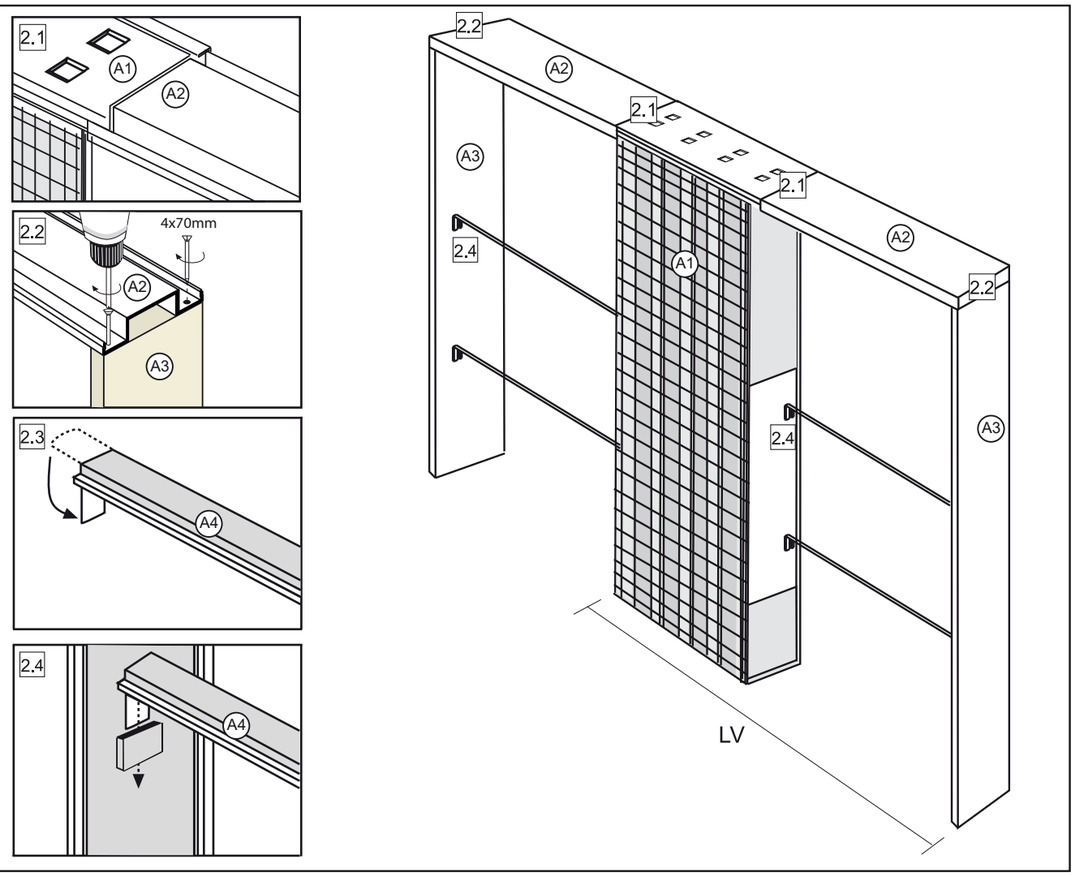

3

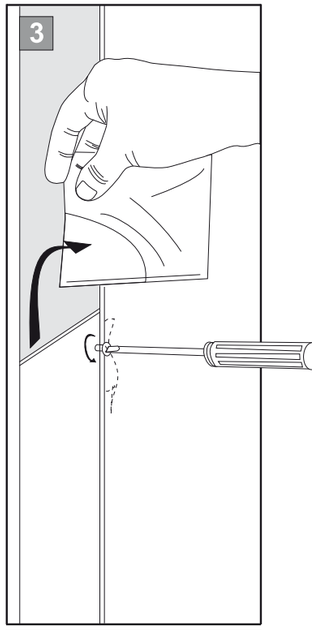

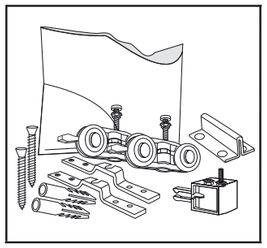

4

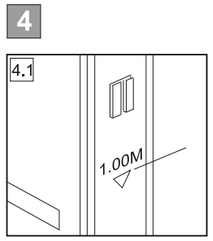

(PT) **Atenção**
1m de altura depois de pavimento acabado

(ES) **Advertencia**
1 m de altura después del suelo acabado

(FR) **Attention**
1m de hauteur après sol fini

(GR) **Warning**
Height of 1m after finished floor

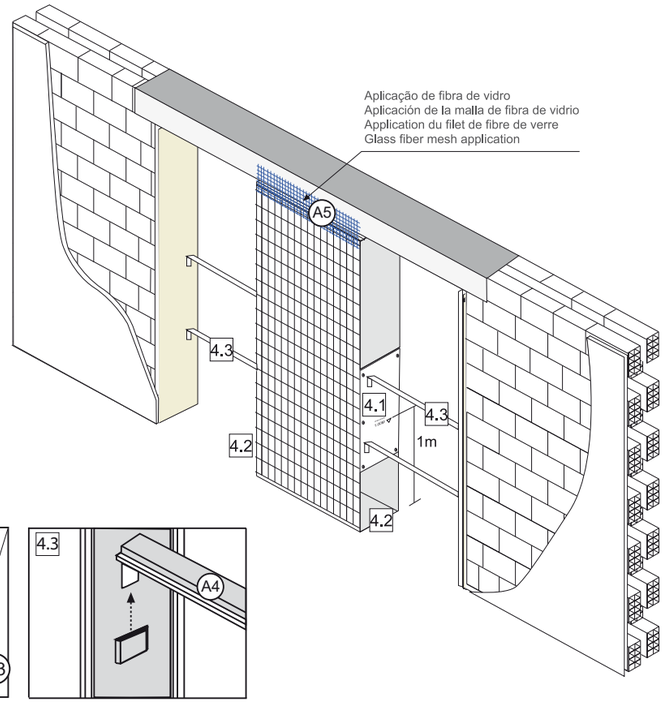

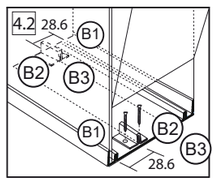

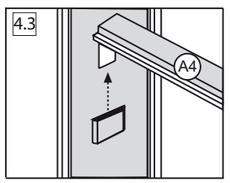

5

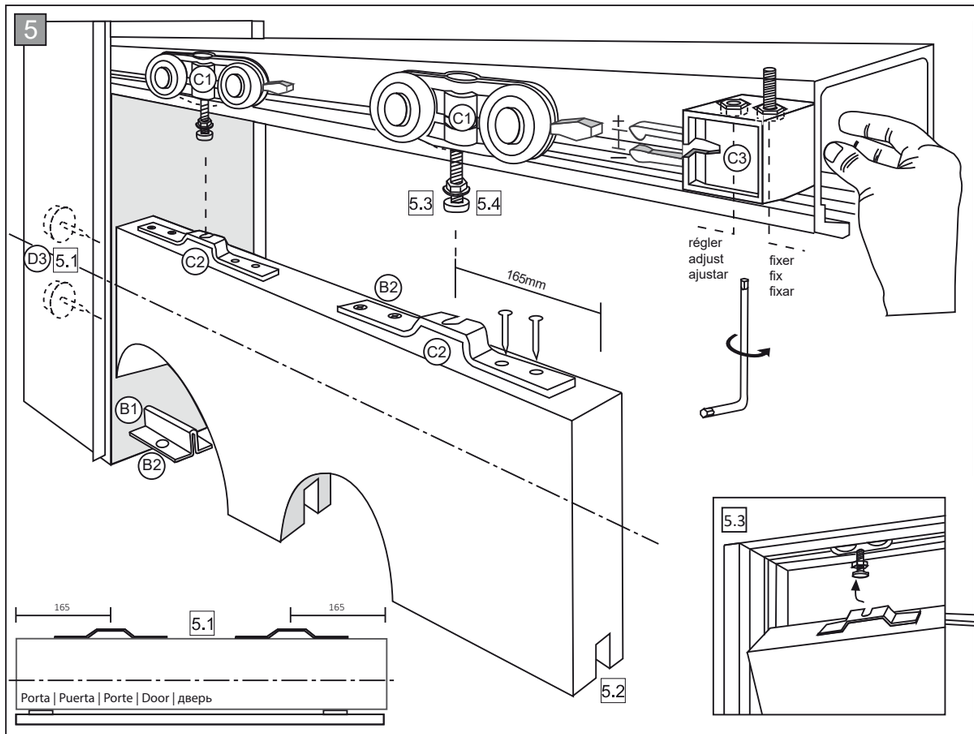

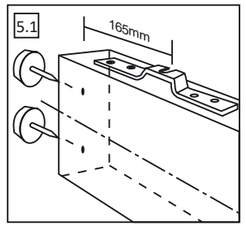

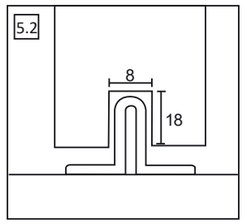

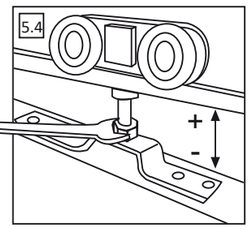

OPENSPACE | A1.12.01 - 10.1202 - V2 08/2018

INVERSO NV - (PT) Aplicação em gesso cartonado | (EN) Plasterboard application | (FR) Application sur plaque de plâtre | (ES) Aplición en paredes en cartón-yeso

openspace® sliding doors by GOSIMAT

A

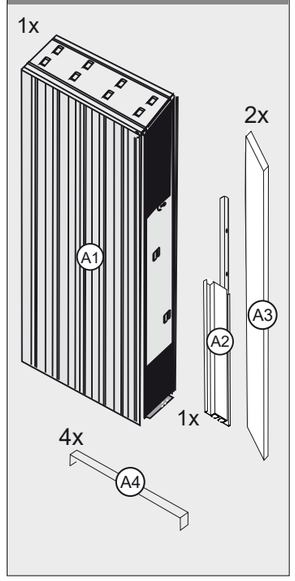

B - 2X SACO INF

1x B1	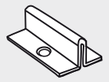	Ref.7001
4x B2	4X40mm	4x40
4X B3		M6x30
32X B4		3.5x19

C - 2X SACO SUP 0001

2x C1	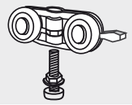	Ref. 3003
4x C2		Ref.5001
18x C3	4X40mm	4x40
1x C4	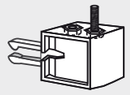	Ref: 4006
2x C5		Ref: 14002

1

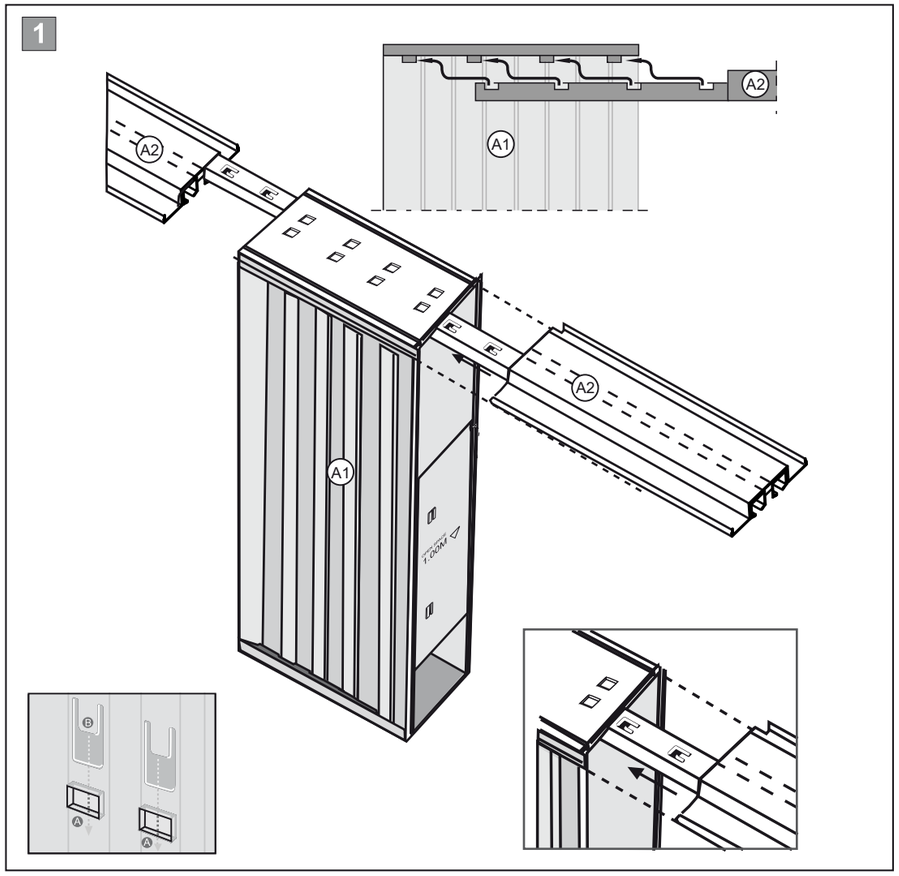

2

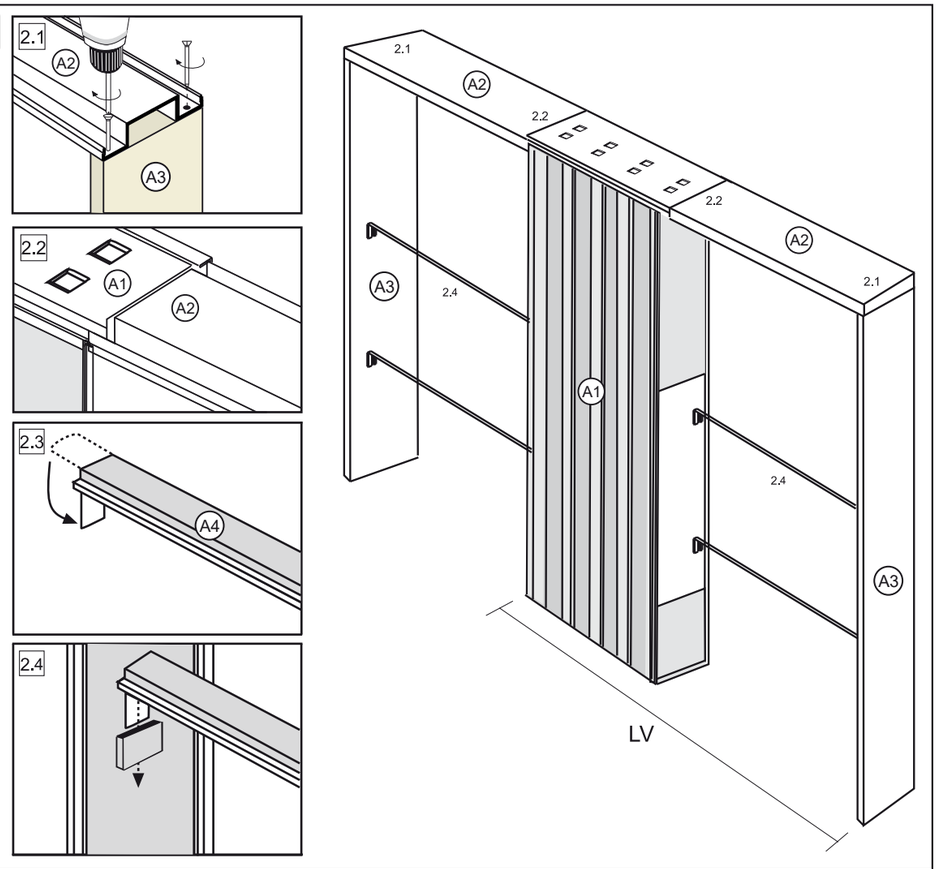

3

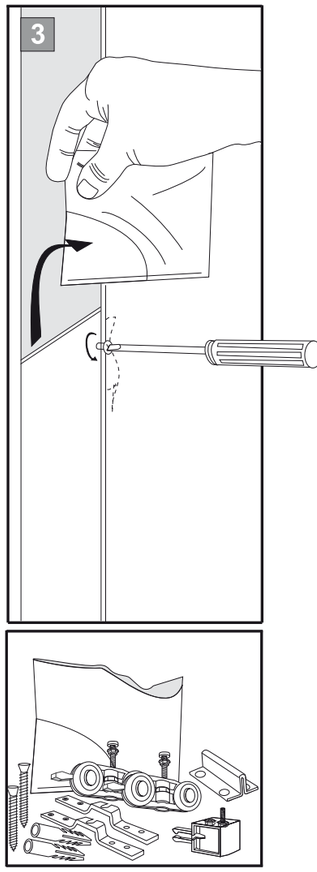

4

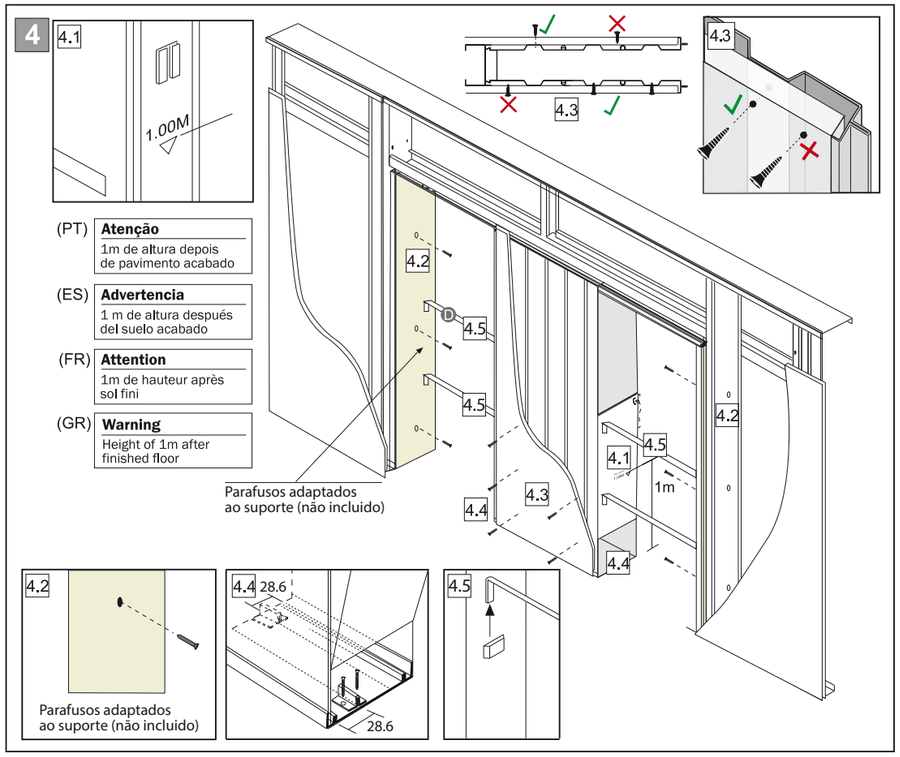
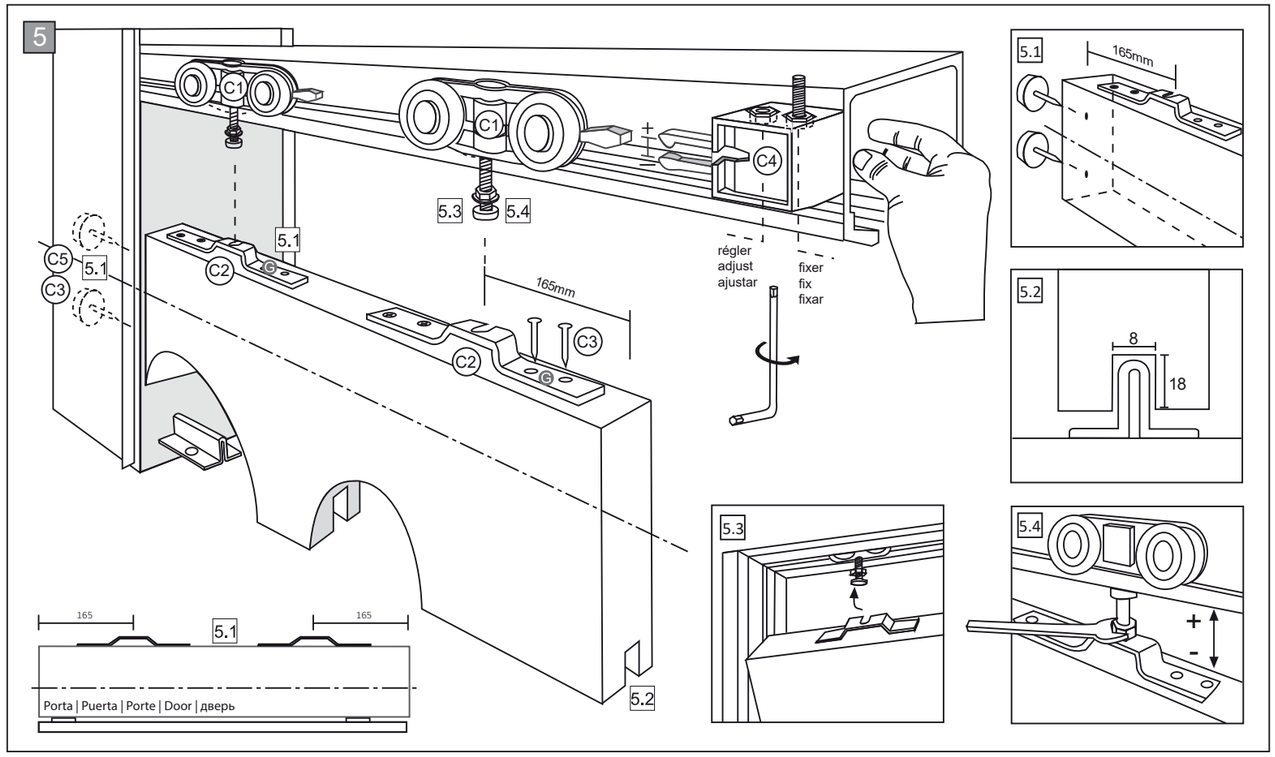
5